| REV | REVISIONS DESCRIPTION | DATE | APPROVED |
|---|---|---|---|
| | | | |

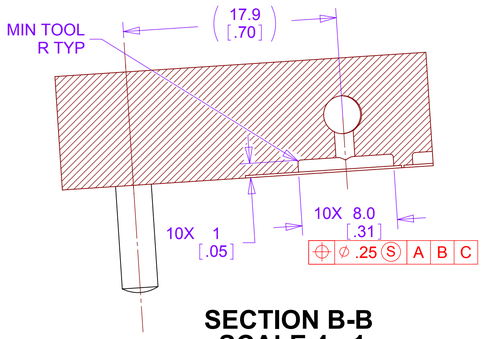


**SECTION B-B**
**SCALE 4 : 1**

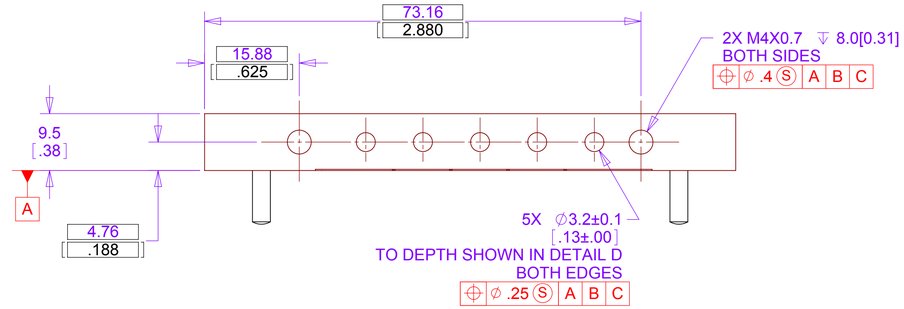


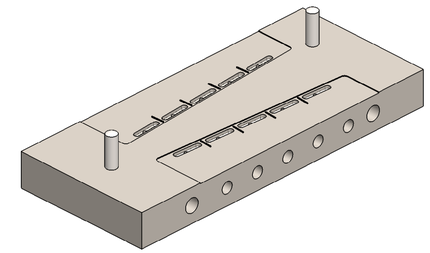

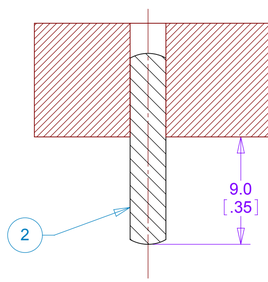


**SECTION A-A**
**SCALE 4 : 1**

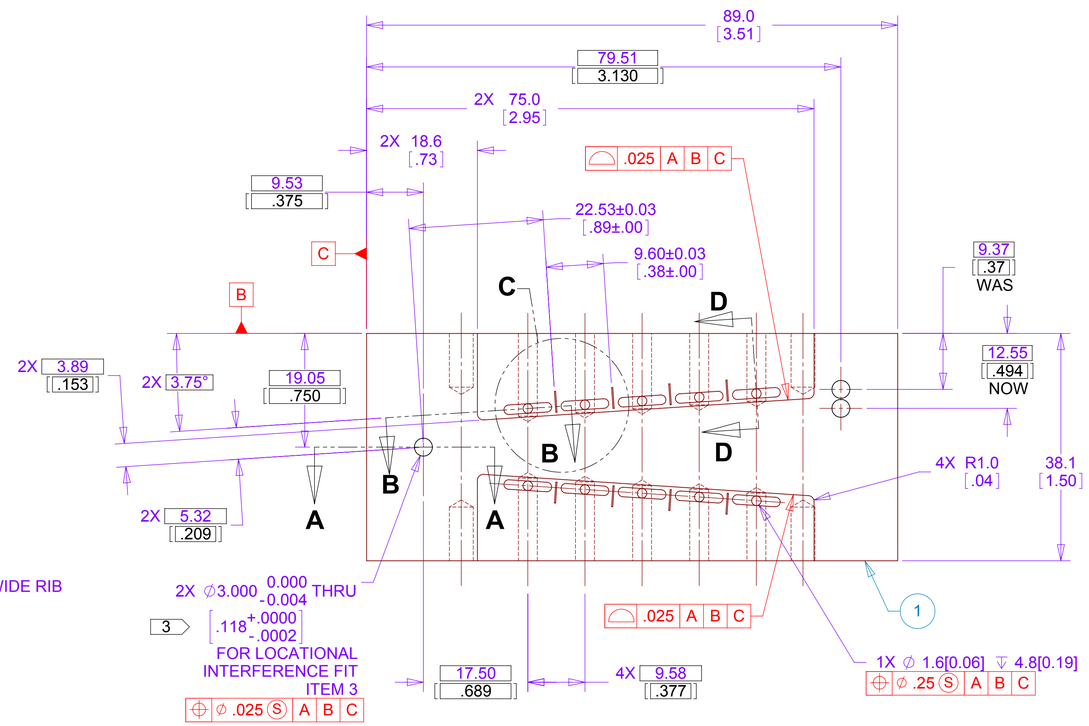


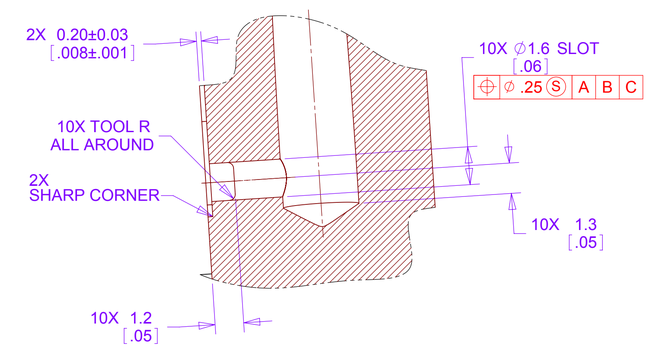


**SECTION D-D**
**SCALE 8 : 1**

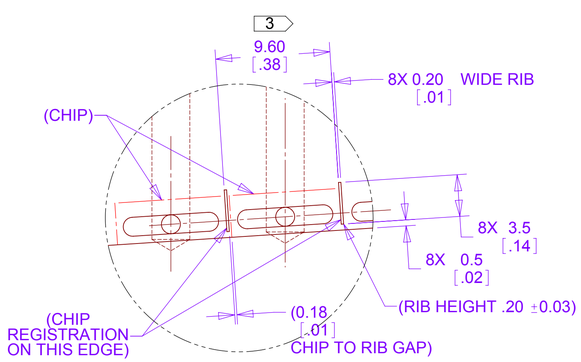


**DETAIL C**
**SCALE 4 : 1**

NOTES: UNLESS OTHERWISE SPECIFIED

1. ALL DIMENSIONS IN MILLIMETERS [DUAL DIMENSIONS IN INCHES]
2. DIMENSIONS AND TOLERANCING PER ASME Y14.5M-1994

3 INSPECT AND RECORD LOCATION.

| PARTS LIST | | | | |
|---|---|---|---|---|
| ITEM NO. | QTY. | PART NUMBER | DESCRIPTION | Material |
| 1 | 1 | | Station 1 FVTX Chip Positioning Jig Plate | 18-8 or 316 SST |
| 2 | 2 | Nordex EPS-M4-8 or Equiv. | Dowel Pin, 3.0mm X 16mm lg | 18-8 SST |

HYTEC RELEASED DOCUMENT

UNLESS OTHERWISE SPECIFIED: DIMENSIONS ARE IN MILLIMETERS -TOLERANCES-

DECIMALS
.X = +/- .5
.X = +/- .1
.XX = +/- .01
.XXX = +/- .001

ANGULAR
.X = +/- 30'
.XX = +/- 15'

SURFACE FINISH = 250

FINISH

THIRD ANGLE PROJECTION

PART NO. 111-PHX-01-5305A-1

CAD GENERATED DRAWING, DO NOT MANUALLY UPDATE DO NOT SCALE DRAWING

| | SIGNATURE | DATE |
|---|---|---|
| Designer | Roger L. Smith | 2/17/2010 |
| Drawn | Roger L. Smith | 2/17/2010 |
| Checked | RJ Ponchione | 4/12/2010 |
| Engineer | RJ Ponchione | 2/17/2010 |
| Approved | RJ Ponchione | 4/12/2010 |

**HYTEC, INC**

TITLE
**PHENIX CENTRAL UPGRADE**
**FVTX STATION 1 DETECTOR**
**ASSEMBLY JIG**
**CHIP POSITIONING JIG**

DWG. NO. 111-PHX-01-5305A D
SIZE
SHEET NO. 1 of 1
SCALE 2:1
REVISION

THIS DOCUMENT CONTAINS INFORMATION THAT IS THE PROPRIETARY PROPERTY OF HYTEC, INC. REPRODUCTION, DISCLOSURE, OR RELEASE TO OTHERS, MANUALLY OR ELECTRONICALLY, IS STRICTLY PROHIBITED WITHOUT THE PRIOR WRITTEN CONSENT OF HYTEC, INC.